5K Dual Axle Single Stage Donkey
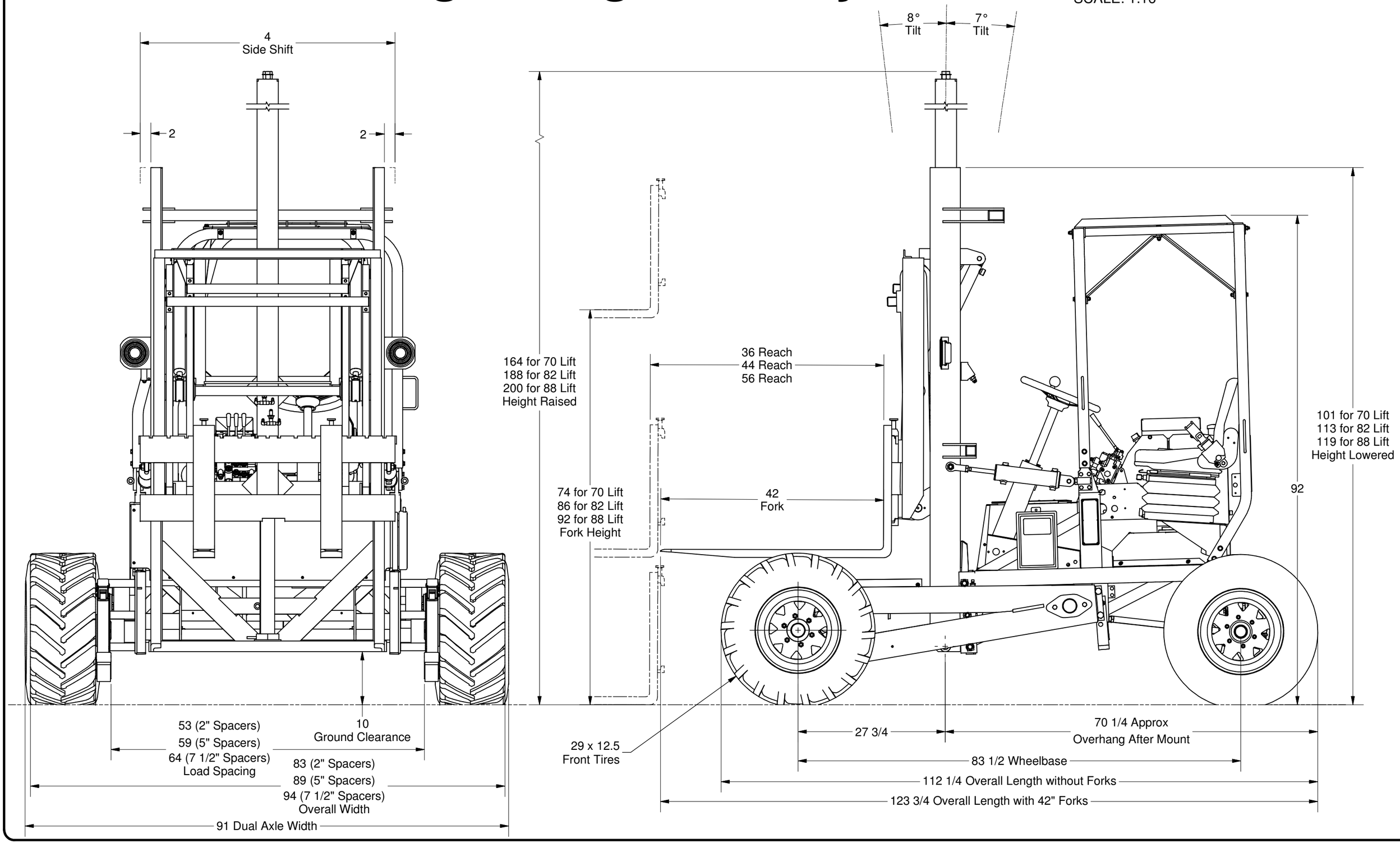
100002NA Rev.-
All dimensions are in inches, reference only, and may vary.
Tires size varies according to brands and types.
SCALE: 1:16