Two Stage Donkey Spec
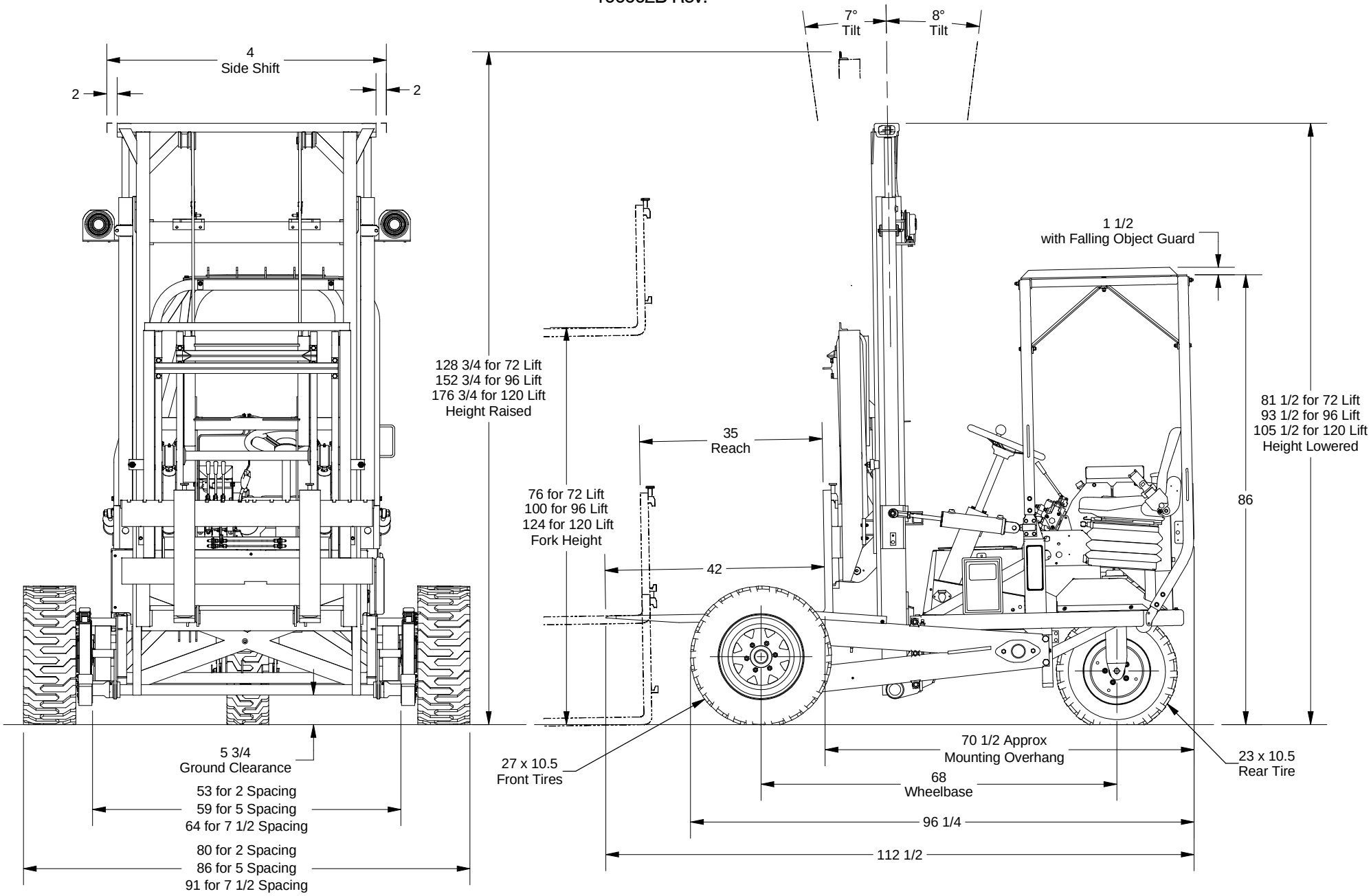
100002B Rev.*