5K Donkey
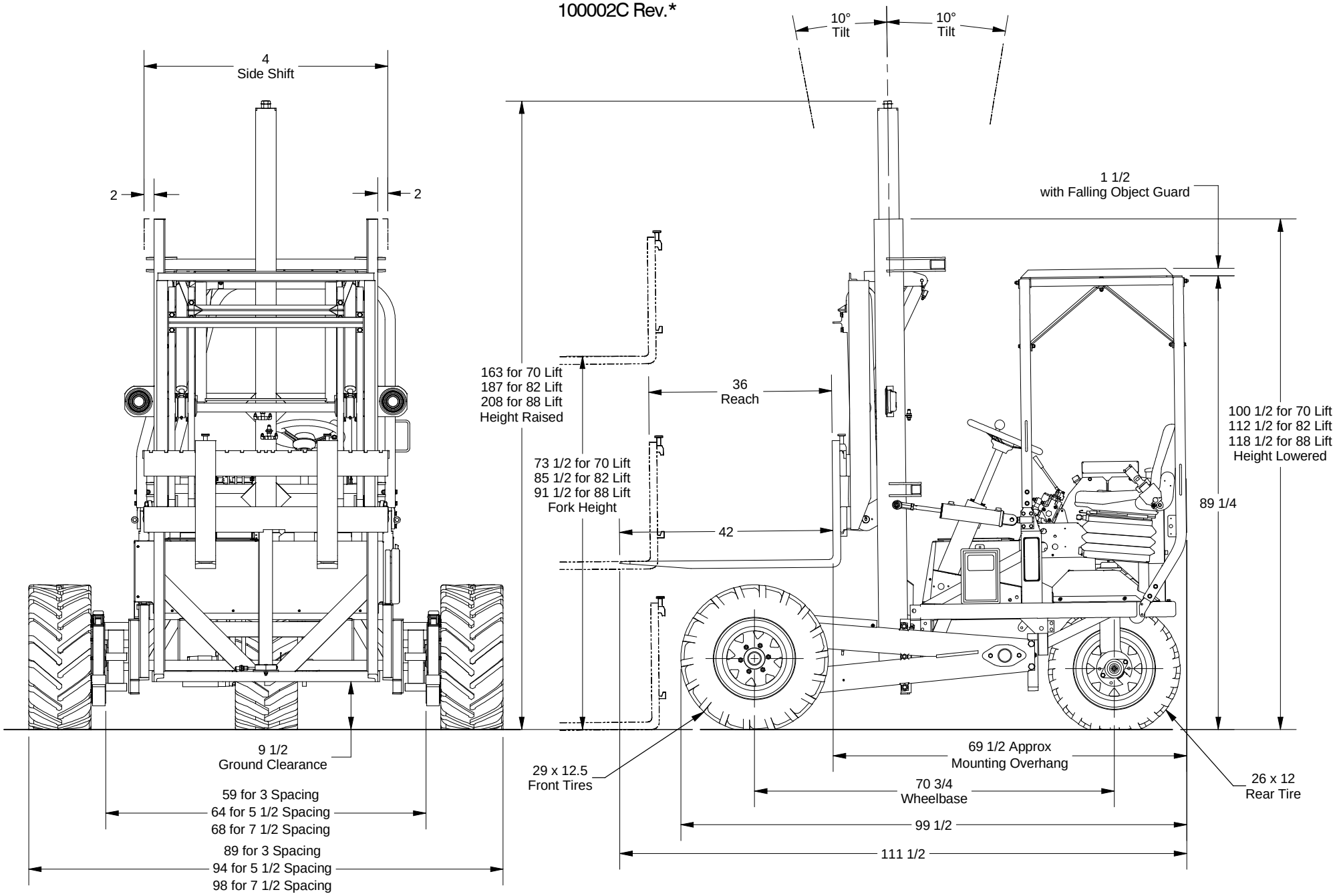
100002C Rev.*