5K Two Stage Donkey
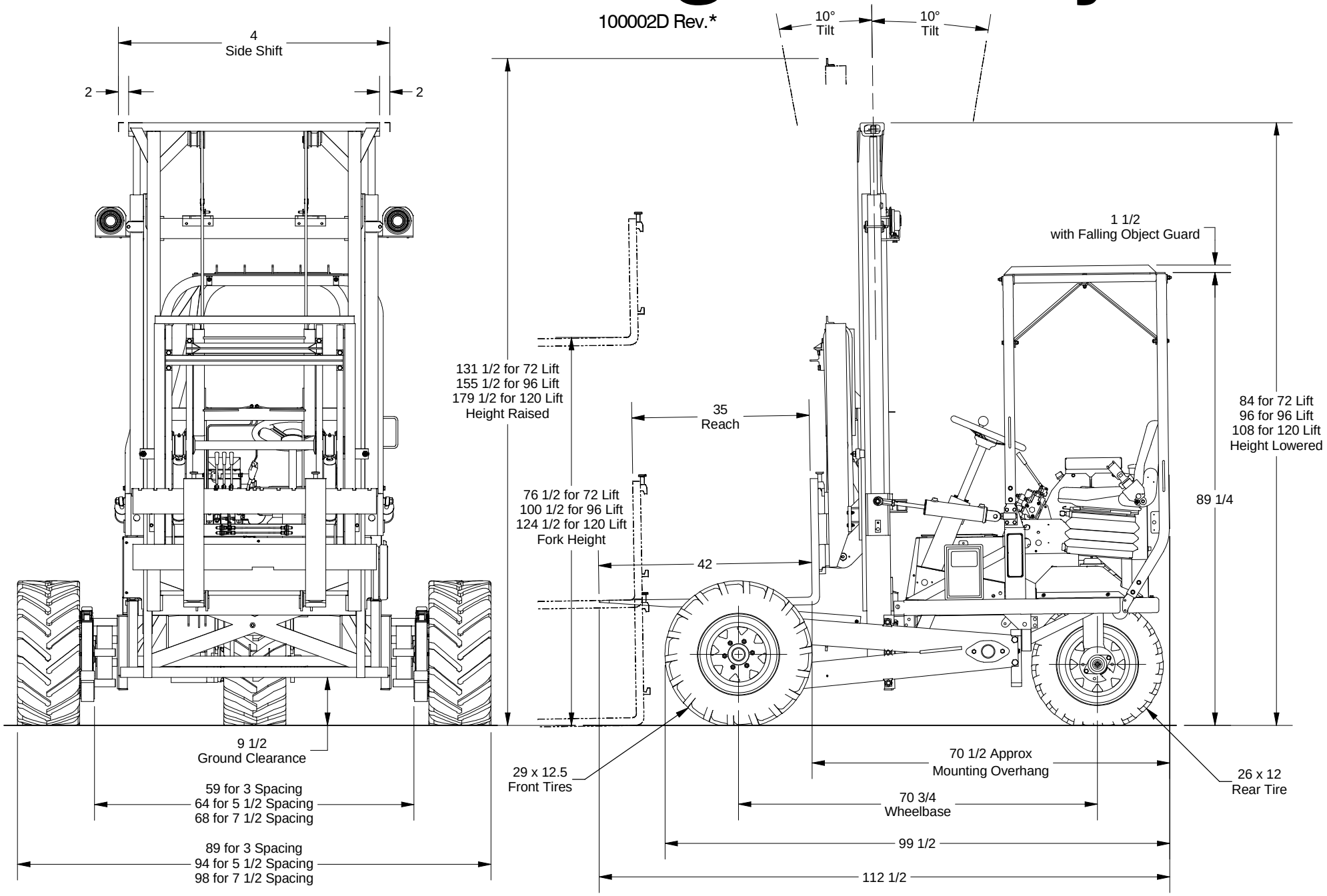
100002D Rev.*